Smart Home Systems

DS-KH6320-TE1

KH6 SERIES 7" IP INDOOR STATION

7" Touch Screen | 1024 x 600 | Hik-Connect App

TECHNICAL DATASHEET

English | Reference edition v1.0

Aura.eg

Branded reference copy - product model DS-KH6320-TE1



VIDEO INTERCOM • NETWORK INDOOR STATION • 7-INCH

Hikvision DS-KH6320-TE1

KH6 Series 7-Inch IP-Based Indoor Station

The KH6 series IP indoor station, with a 7-inch touch screen, brings fluent video and audio communication. It can deploy the whole video intercom system independently, without extra devices or configurations, reducing deployment time and cost. You can view, chat with, and grant access to visitors via mobile phone from anywhere, and the device can link other systems such as CCTV and elevator control.

7 Inch
TFT touch screen, 1024 x 600.

Hik-Connect
Mobile app control.

8
Alarm inputs.

128 GB
TF card support.

Easy Wizard Setup | No PC Required | Voice Messages | Elevator Access Control | 16 Linked Cameras | 17 Linked Door Stations

Key Features

- 7-inch TFT touch screen with 1024 x 600 resolution.
- Convenient Hik-Connect app mobile control: receive calls, open the door and live view remotely.
- Easy to use without a PC, with an easy wizard for quick setup.
- Configure the whole system on one touch screen.
- Live view of the door station and cameras in public areas.
- Voice messages when there is no response from the indoor station.
- Receives alarms by linkage with an alarm system and notifies the center to handle them in time.
- Elevator access control.

Aura.eg

Technical Specifications

Item	Specification
SYSTEM	
Operating system	Linux
ROM	32 MB
RAM	128 MB
Processor	Embedded high-performance processor
DISPLAY	
Screen size	7-inch
Operation method	Capacitive touch screen
Type	Colorful TFT
Resolution	1024 x 600
AUDIO	
Audio input	1 built-in omnidirectional microphone
Audio compression standard	G.711 U, G.711 A, G.722.1
Audio output	1 built-in loudspeaker
Audio compression bitrate	64 Kbps
Audio quality	Noise suppression and echo cancellation
Volume adjustment	Adjustable
CAPACITY	
Message capacity	TF card inserted: 200 captured pictures, 200 alarm records; without TF card: 2 MB RAM for pictures, 200 alarm records
Notice capacity	200
Linked indoor extensions	16
Linked door stations	17
Linked network cameras	16
NETWORK & INTERFACES	
Network protocol	TCP/IP, SIP, RTSP
Alarm input	8
Network interface	1 x RJ-45, 10/100 Mbps self-adaptive
TF card	Supported, up to 128 GB
GENERAL	
Installation	Surface mounting (wall mounting plate)
Power supply	12 VDC
Weight	Net: 350 g; gross: 675 g
Working temperature	-10 °C to 50 °C (14 °F to 122 °F)
Working humidity	10% to 90% (non-condensing)

Aura.eg

Item	Specification
Dimensions (W x H x D)	200 x 140 x 15.1 mm (7.9" x 5.5" x 0.6")
Application environment	Indoor
Power consumption	≤ 5 W
Language	English, Arabic, French, Russian, Spanish, Spanish (Latin America), Italian, German, Polish, Turkish, Portuguese, Portuguese (Brazil), Uzbek, Kazakh, Czech, Hungarian, Dutch, Romanian, Bulgarian, Ukrainian, Croatian, Serbian, Greek, Lithuanian, Estonian, Latvian, Norwegian, Danish, Slovenian, Slovak, Hebrew, Swedish, Finnish, Mongolian, Vietnamese, Traditional Chinese

Appearance

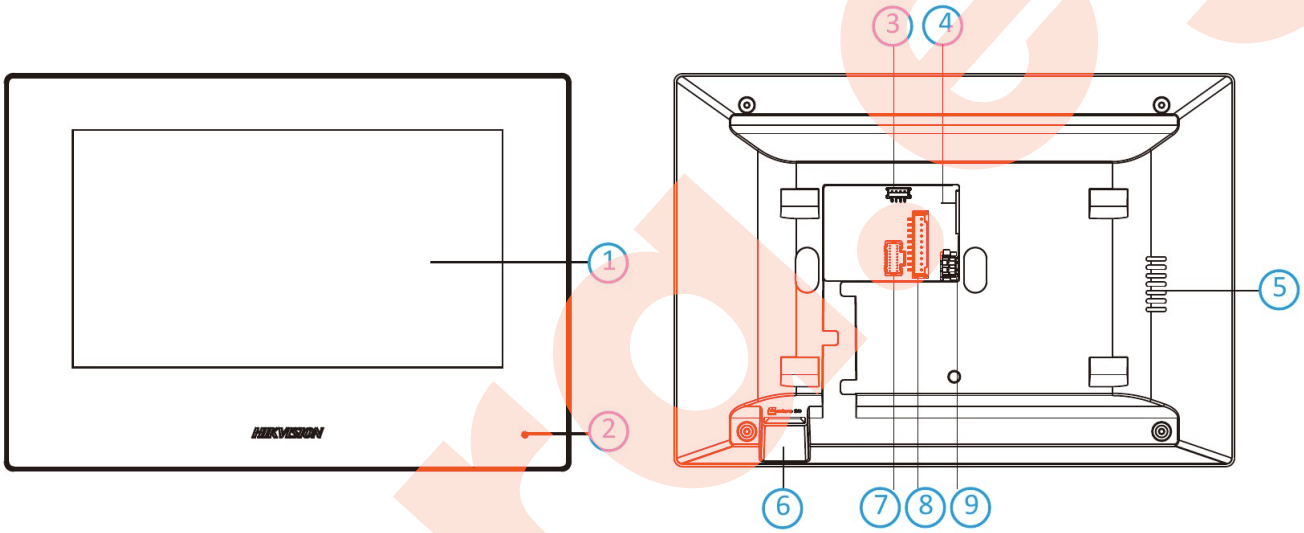

No.	Description	No.	Description
1	Screen	6	TF card slot
2	Microphone	7	Alarm terminal
3	Debugging port	8	Reserved
4	Network interface	9	Power terminal
5	Loudspeaker		

Note: The debugging port is used for debugging only.

Dimensions

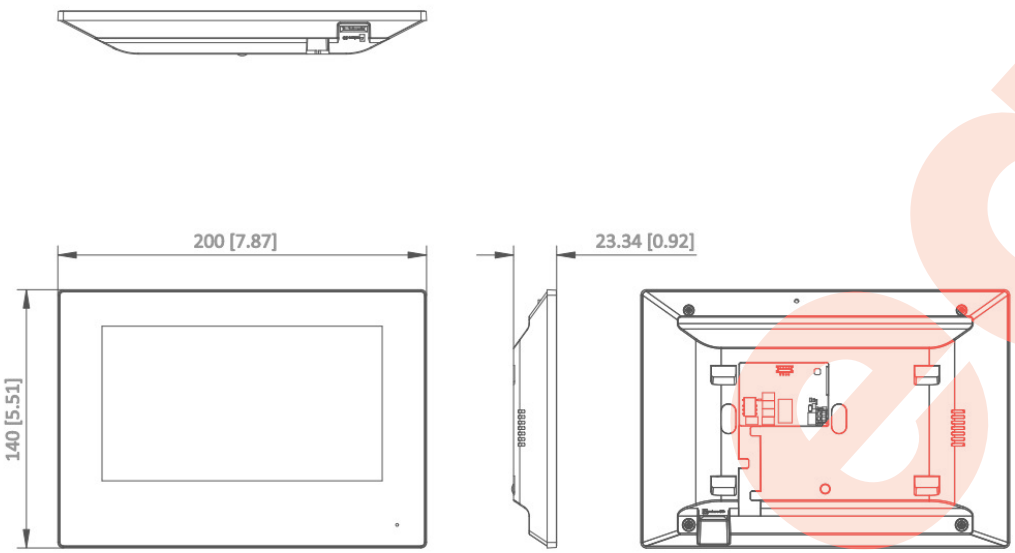

Unit:mm [inch]

SCALE	1:1

Aura.eg

Terminal & Wiring

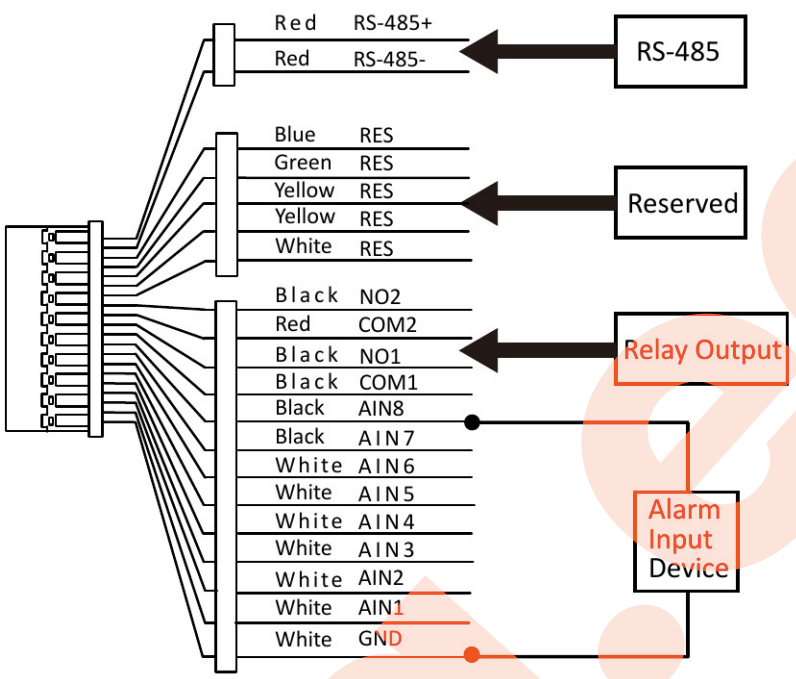

DS-KH6320-TE1: The 20-pin rear terminal provides 8 alarm input pins (AIN1-AIN8), 1 GND pin and 11 reserved pins. RS-485 and relay output pins in the diagram apply to other models only.

Installation

- Wall mounting with the supplied wall mounting plate; a 75 x 75 x 50 mm junction box is optional.
- The supported power supply is 12 VDC; make sure your power supply matches the indoor station.
- Make sure all related equipment is powered off during installation.

Aura.eg

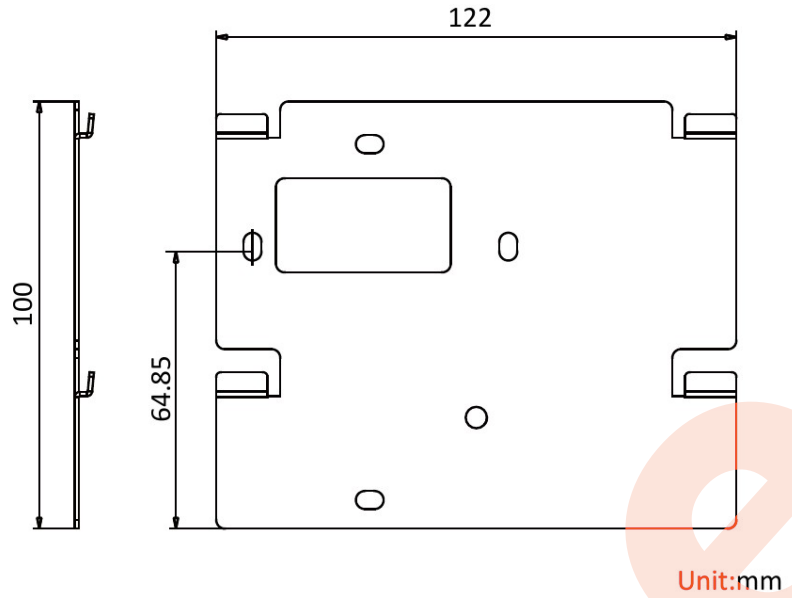

Wall mounting plate (unit: mm)

Wall Mounting with Junction Box

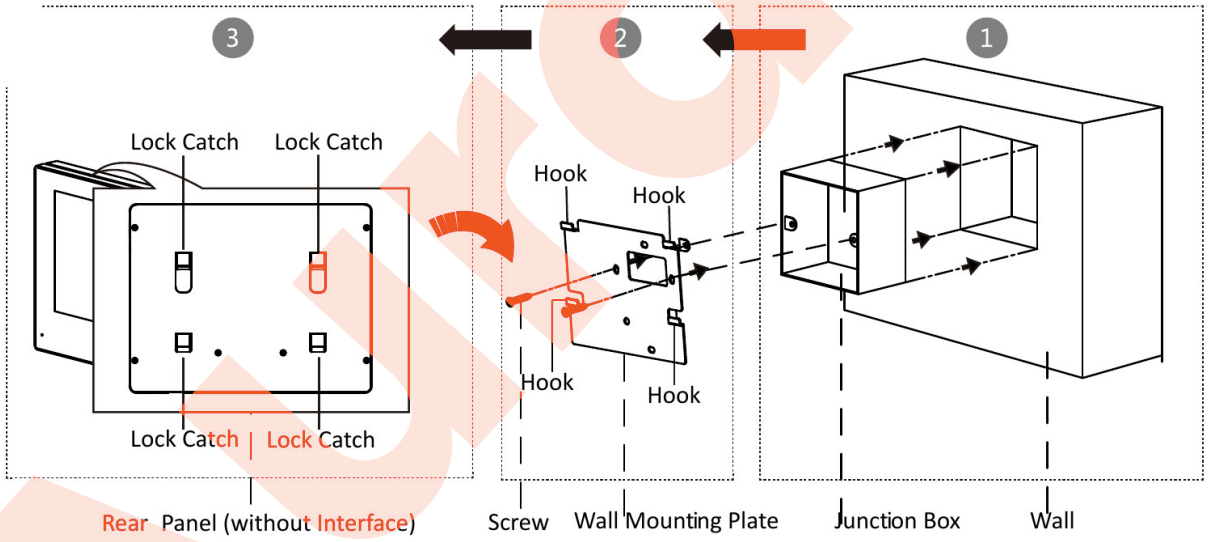

- Chisel a hole of 76 (W) x 76 (L) x 50 (D) mm in the wall and insert the junction box.
- Fix the wall mounting plate to the junction box with 2 screws.
- Hook the indoor station onto the plate by inserting the plate hooks into the rear slots; the lock catch locks automatically.

Wall Mounting without Junction Box

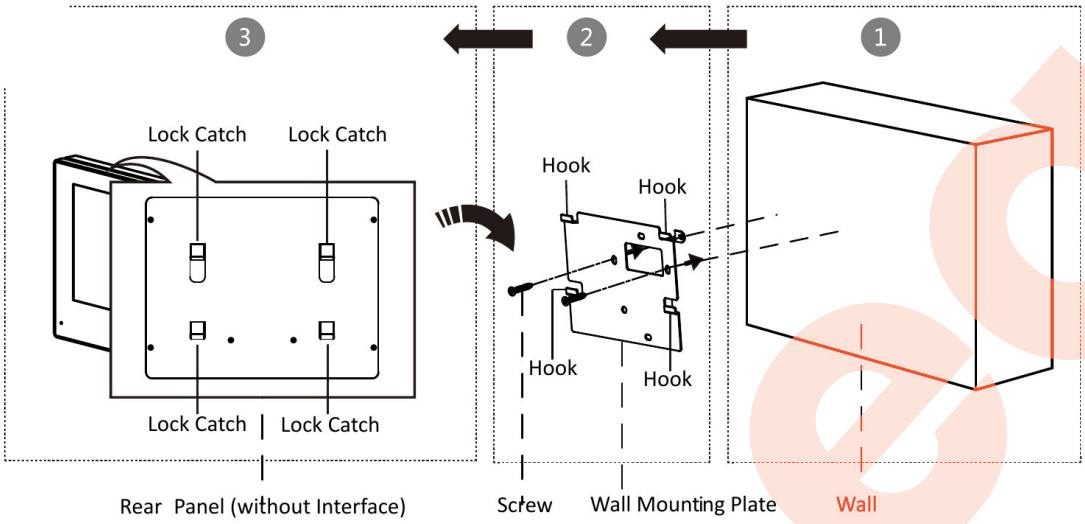

- Insert 2 expansion tubes into the wall.
- Fix the wall mounting plate to the wall with 2 screws.
- Hook the indoor station onto the plate; the lock catch locks automatically.

Installation Environment

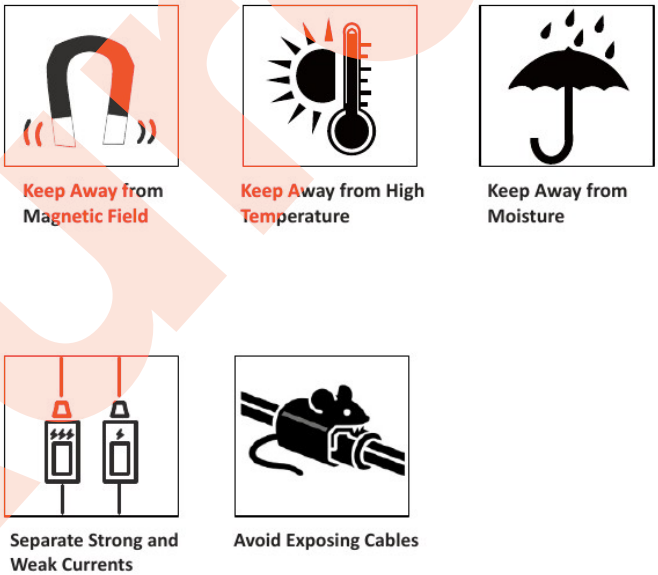

Optional Accessories



DS-KABH6320-T



DS-KAW50-1

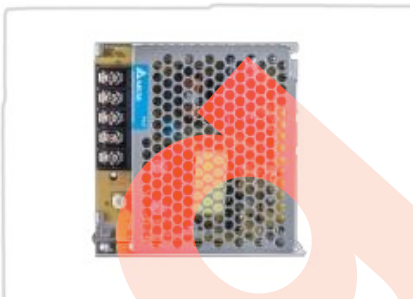

DS-KAW50-1N

Activation & Quick Configuration

- Power on the device; it enters the activation page automatically. Create a strong password, confirm it, and tap OK.

1. Language

Choose the language and tap Next.

2. Network

Edit Local IP, Subnet Mask and Gateway, or enable DHCP, then tap Next.

3. Indoor Station

Edit Floor and Room No. and create the SIP register password (same as the door station registration password).

4. Advanced

Optional: edit Community, Building and Unit No., and link another indoor station.

5. Link Devices

Devices on the same LAN appear in the list; tap one or enter its serial No. to link.

6. Finish

Tap Finish to save the settings.

Indoor extension: Select Indoor Extension, edit No. and Room Name, and create the SIP register password to link it to the main indoor station.

Aura.eg

Do Not Disturb Setup

- Tap the Settings icon on the home screen, then open Call Settings > Other Settings.
- Select the Do Not Disturb device type: All or Indoor Station.
- Select when not to be disturbed: Close, All Day, or Schedule; for Schedule, set the start and end times and tap OK.

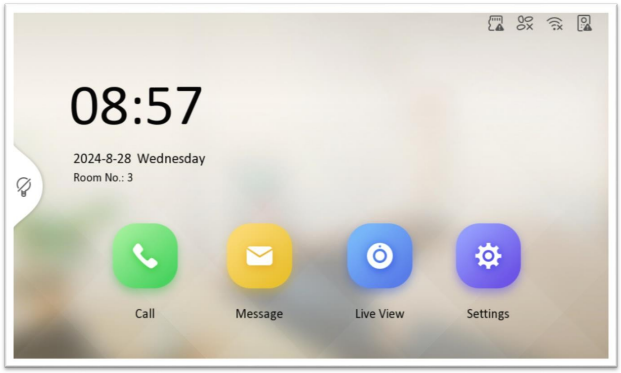

1. Home screen > Settings

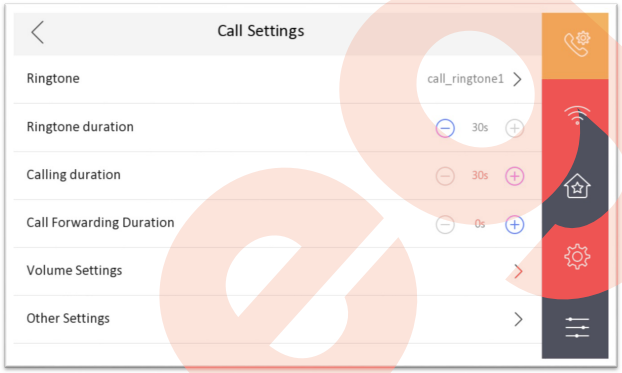

2. Call Settings > Other Settings

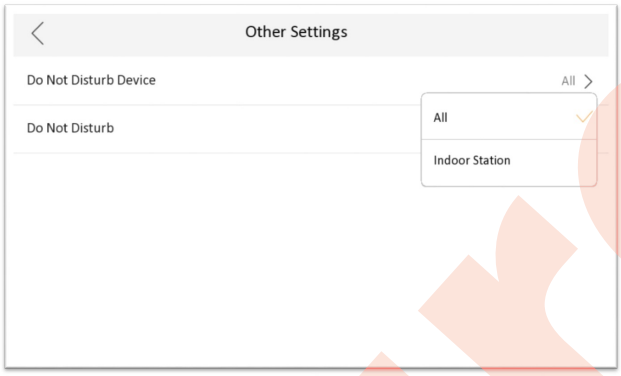

3. Do Not Disturb device

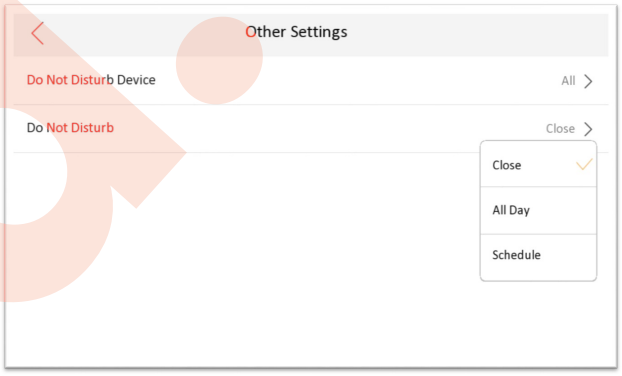

4. Close / All Day / Schedule

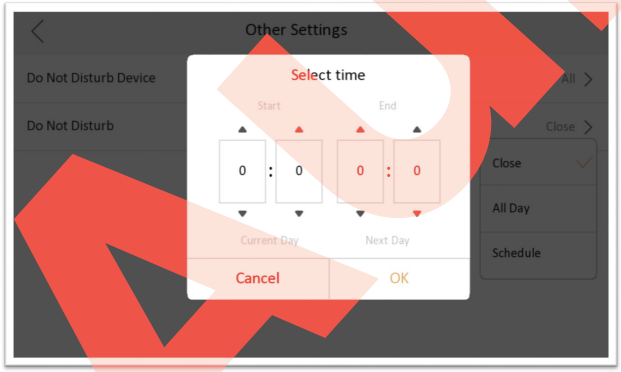

5. Schedule start and end time