DS-3WAP622G-SI

WI-FI 6 1800M CEILING ACCESS POINT

Wi-Fi 6 1775 Mbps | PoE 802.3af/at | 100+ Users

TECHNICAL DATASHEET

English | Reference edition v1.0

Aura.eg

Branded reference copy - product model DS-3WAP622G-SI



NETWORK • WI-FI 6 ACCESS POINT • CEILING MOUNT

Hikvision DS-3WAP622G-SI

Wi-Fi 6 1800M Ceiling Access Point

DS-3WAP622G-SI is an indoor Wi-Fi 6 ceiling access point with a dual-band, four-stream design that meets the wireless coverage requirements of small, medium and micro enterprises.

1775 Mbps
Wi-Fi 6 (802.11ax) dual-band.

100+
Recommended concurrent users.

PoE
IEEE 802.3af/at or 12 VDC.

8 SSIDs
Up to 256 clients.

Auto RF Optimization | Intelligent Fast Roaming | MU-MIMO 2x2 | Centralized AC Management | Ceiling / Wall / Desk

Key Features

- 1 Gigabit port with PoE input.
- 802.11ax Wi-Fi 6, 1775 Mbps.
- 100+ concurrent user connections.
- Auto RF optimization.
- Intelligent fast roaming.

Aura.eg

Technical Specifications

Item	Specification
GENERAL	
Weight	0.4 kg (0.88 lb)
Installation mode	Desk-mounted, wall-mounted, ceiling mounting
Working temperature	0 °C to 40 °C (32 °F to 104 °F)
Working humidity	5% to 95% (non-condensing)
Storage temperature	-40 °C to 70 °C (-40 °F to 158 °F)
Storage humidity	5% to 95% (non-condensing)
Dimensions (W x H x D)	220 x 220 x 35 mm (8.66" x 8.66" x 1.37")
Power consumption	Max. 11.35 W
WLAN	
Maximum clients	256
Recommended clients	100
Maximum SSIDs	8
Working frequency band	Radio 1: 5 GHz (11a/n/ac/ax); Radio 2: 2.4 GHz (11b/g/n/ax)
Wi-Fi standard	Wi-Fi 6
Wi-Fi speed	2.4 GHz: 574 Mbps; 5 GHz: 1201 Mbps
Spatial streams	2.4 GHz: 2 x 2 MU-MIMO; 5 GHz: 2 x 2 MU-MIMO
Channel width	2.4 GHz: Auto/20/40 MHz; 5 GHz: Auto/20/40/80 MHz
Number of antennas	2.4 GHz: 2; 5 GHz: 2
Antenna type	Built-in omnidirectional antennas
Antenna gain	2.4 GHz: 3 dBi; 5 GHz: 4 dBi
Transmit power	20 dBm
Modulation	OFDM: BPSK, QPSK, 16-QAM, 64-QAM; DSSS: DBPSK, DQPSK, CCK; MIMO-OFDM 11n: MCS 0-15; 11ac: MCS 0-9; 11ax: MCS 0-11
SOFTWARE	
WLAN security	WPA-PSK, WPA2-PSK, WPA/WPA2-PSK, blocklist & allowlist, dynamic unicast/multicast key update, open system / shared key authentication, wireless endpoint access, SSID and VLAN binding, 802.11i
Management & maintenance	Centralized AC management
Version upgrade	Upgrade via AC web
HARDWARE	
Interface	1 x Gigabit RJ45 uplink port
Power supply	IEEE 802.3af/at PoE, 12 VDC 1.5 A
LED indicator	Yellow / green / blue for different working states, flashing modes
Reset button	Hardware reset button

Aura.eg

Item	Specification
APPROVAL	
EMC	CE-EMC (EN 55032, EN IEC 61000-3-2, EN 61000-3-3, EN 50130-4, EN 55035)
Safety	CB (IEC 62368-1), CE-LVD (EN 62368-1), UL (UL 60950-1)
Chemistry	CE-RoHS (2011/65/EU), WEEE (2012/19/EU), REACH (EC No. 1907/2006)
Radio	EN 301 893, EN 300 440, EN 62311, EN 301 489-3, EN 301 489-17

Typical Application

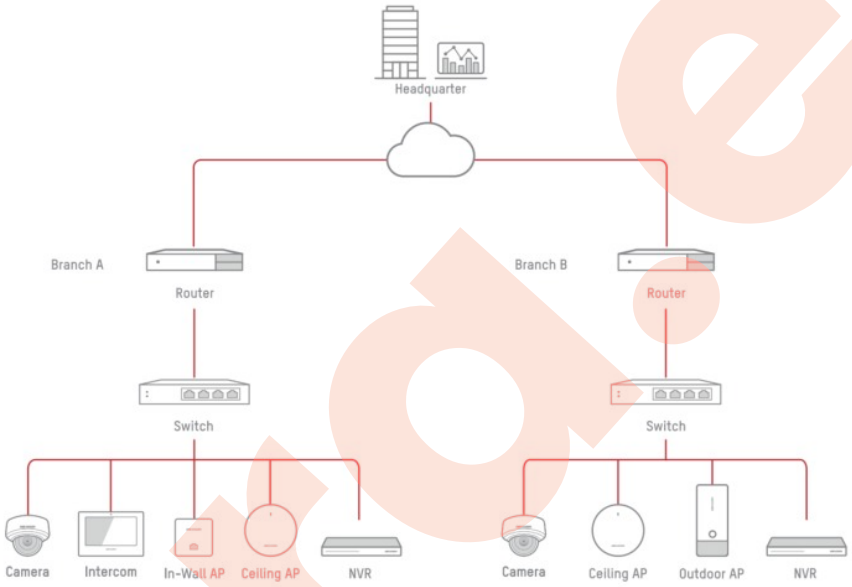

Aura.eg

Dimensions

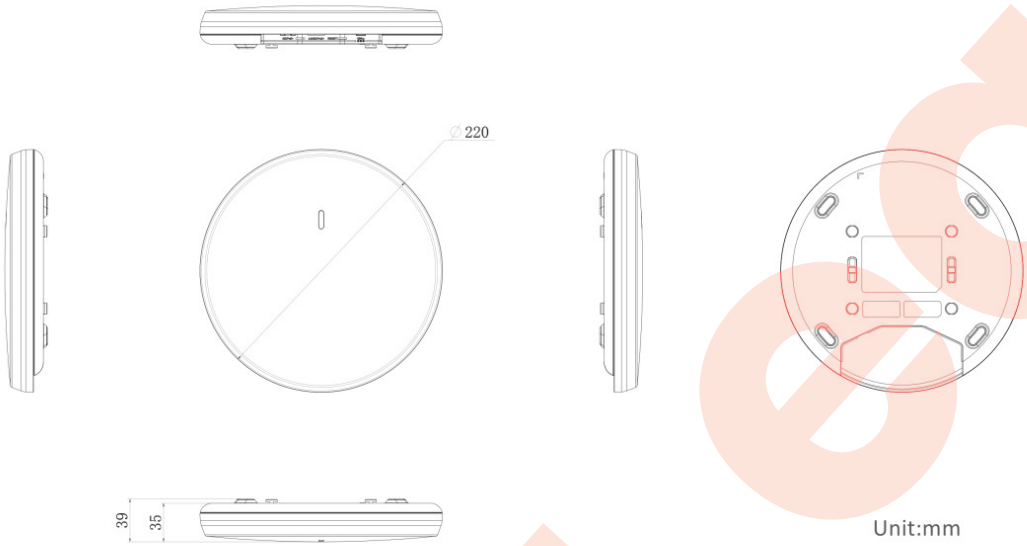



Device dimensions: Ø220 x 35 mm

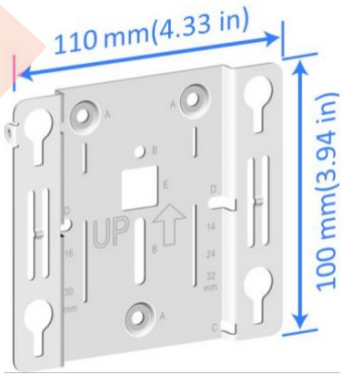

Bracket dimensions: 110 x 100 mm

Packing List

Item	Quantity
Access point	x 1
Mounting bracket	x 1
Screw pack	x 1
Quick start guide	x 1
Regulatory compliance and safety information	x 1

Tools: No installation tools or cable tie are supplied: prepare a torque screwdriver, needle-nose pliers, wire stripper, diagonal pliers, hammer drill, drill, rubber hammer and marker.

Aura.eg

Mounting Bracket

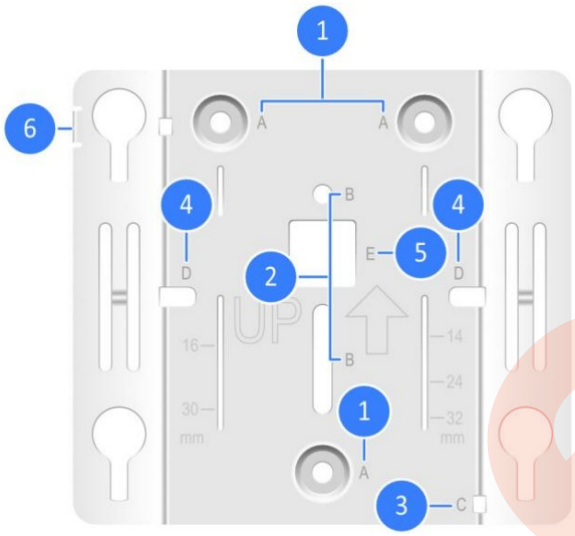

No.	Description
1	Installation holes to attach the bracket to a wall or ceiling tile.
2	T-rail clip installation holes for T-rail mounting.
3	Cable tie installation hole for securing device cables.
4	86-box installation holes (60 mm / 2.36 in apart).
5	Cable hole to connect the AP.
6	Security slot for the M3 x 23.5 mm security screw.

Tip: Connect cables to the device before mounting it; install the M3 x 23.5 mm security screw as needed.

Aura.eg

Wall Mounting

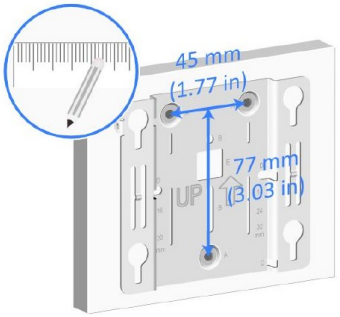

1. Mark the installation holes

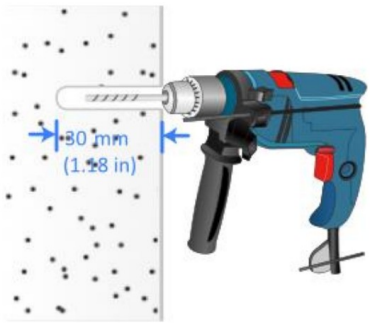

2. Drill Ø6 mm holes

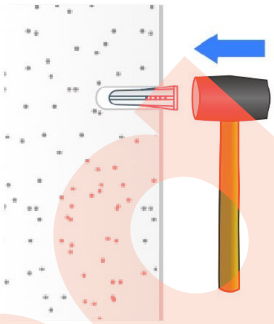

3. Hammer in screw anchors

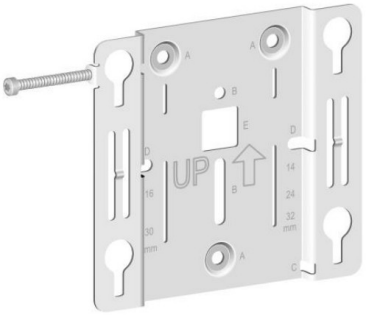

4. Install the security screw

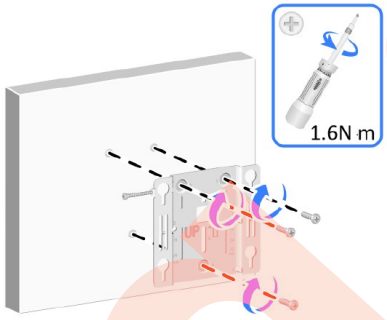

5. Screw the bracket to the wall

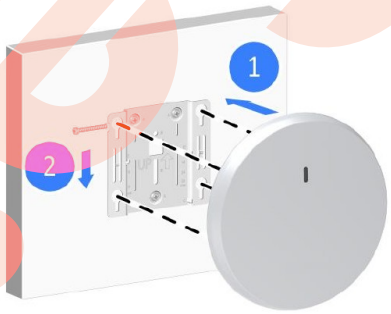

6. Slide the device onto the bracket

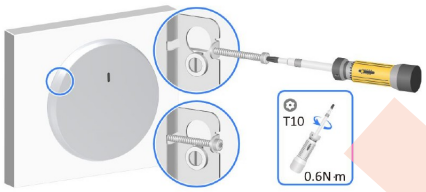

7. Fasten the security screw (T10)

> **Note:** Make sure the screw does not block the keyhole slot. Bracket screws: 1.6 N·m.

Ceiling Mounting



1. Remove the tile and drill 3 holes

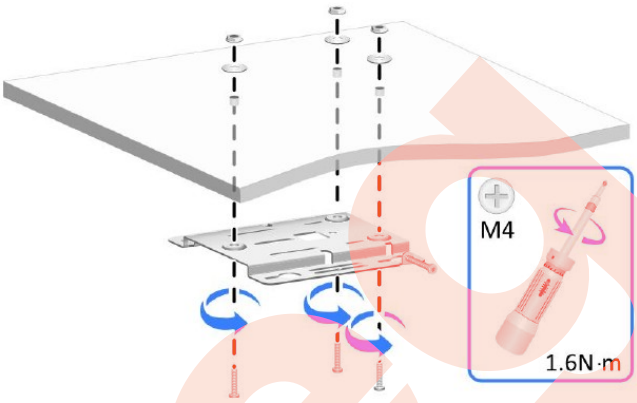

2. Fix the bracket with M4 x 30 screws, washers and nuts

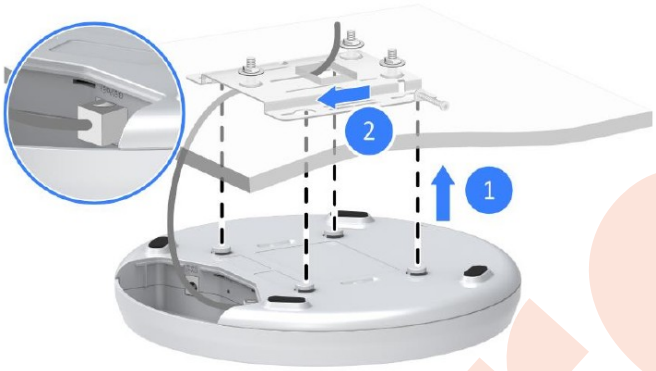

3. Connect the cable and slide the device into place

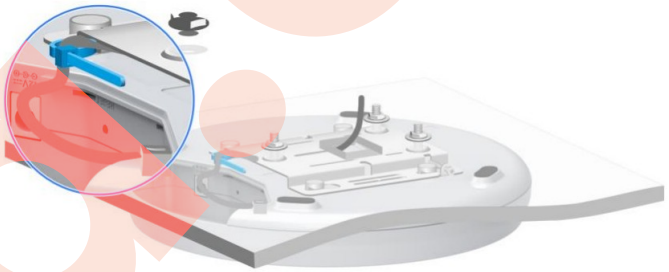

Optional: secure cables with a cable tie

Cable Connection

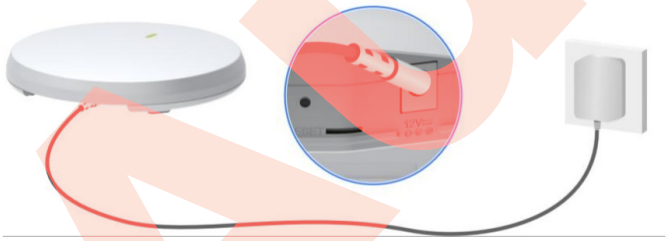

Local power: 12 V / 1.5 A adapter

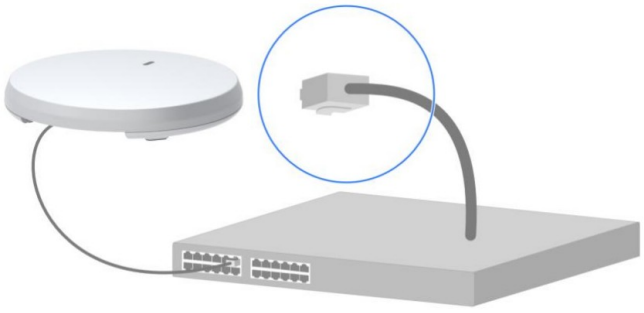

PoE power from a PoE switch

- No power adapter is supplied: use an adapter with 100-240 V AC input, 12 V / 1.5 A output and ≥ 18 W.
- For PoE, connect an Ethernet port on a PoE switch to the PoE port on the AP, then attach the cable cover.

LED Status

LED	Status	Description
Off	-	No power, or the LED has been turned off from the CLI.
Yellow	Steady on	The AP is initializing, or an initialization exception has occurred.
Yellow	Fast flashing (2/s)	All Ethernet ports are down.
Green	Steady on	Registered with an AC, standby (no associated clients).
Green	Slow flashing (1/s)	Registered with an AC, and the radios have associated clients.
Green	Fast flashing (2/s)	The AP is upgrading the image.
Blue	Steady on	Not registered with any AC, standby (no associated clients).
Blue	Flashing (1/s)	Not registered with any AC, but the radios have associated clients.

Safety Instructions

- Place the AP in a dry, flat location and take anti-slip measures; keep it clean and dust-free.
- Do not place the AP in a moist area and avoid liquid intrusion.
- Never install the device in an unstable location; keep the AP and installation tools away from walkways.

Aura.eg