DS-2CD1043G2-LIU

4MP SMART HYBRID LIGHT BULLET CAMERA

4MP 2560 x 1440 | Built-in Mic | IP67

TECHNICAL DATASHEET & INSTALLATION GUIDE

English | Reference edition v1.0

Aura.eg

Branded reference copy - product model DS-2CD1043G2-LIU





- High quality imaging with 4 MP resolution
- Support Human and Vehicle Detection
- Smart Hybrid Light: advanced technology with long range
- Built-in microphone for real-time audio security
- Water and dust resistant (IP67)
- Efficient H.265+ compression technology

▪ Specification

Camera	
Image Sensor	1/3" Progressive Scan CMOS
Max. Resolution	2560 × 1440
Min. Illumination	Color: 0.005 Lux @ (F1.6, AGC ON), B/W: 0 Lux with IR
Shutter Time	1/3 s to 1/100,000 s
Day & Night	IR cut filter
Angle Adjustment	Pan: 0° to 360°, tilt: 0° to 90°, rotate: 0° to 360°
Lens	
Lens Type	Fixed focal lens, 2.8 and 4 mm optional
Focal Length & FOV	2.8 mm, horizontal FOV 98°, vertical FOV 54°, diagonal FOV 114° 4 mm, horizontal FOV 78°, vertical FOV 42°, diagonal FOV 93°
Lens Mount	M12
Iris Type	Fixed
Aperture	F1.6
DORI	
DORI	2.8 mm, D: 63 m, O: 25 m, R: 12 m, I: 6 m 4 mm, D: 78 m, O: 31 m, R: 15 m, I: 7 m
Illuminator	
Supplement Light Type	IR,White Light
Supplement Light Range	Up to 30 m
Smart Supplement Light	Yes
IR Wavelength	850 nm

Aura.eg

Video	
Main Stream	50 Hz: 20 fps (2560 × 1440) 25 fps (1920 × 1080, 1280 × 720) 60 Hz: 20 fps (2560 × 1440) 24 fps (1920 × 1080, 1280 × 720)
Sub-Stream	50 Hz: 25 fps (1280 × 720, 640 × 480, 640 × 360) 60 Hz: 24 fps (1280 × 720, 640 × 480, 640 × 360)
Video Compression	Main stream: H.265+/H.265/H.264+/H.264, Sub-stream: H.265/H.264/MJPEG
Video Bit Rate	32 Kbps to 8 Mbps
H.264 Type	Baseline Profile,Main Profile,High Profile
H.265 Type	Main Profile
Bit Rate Control	CBR,VBR
Region of Interest (ROI)	1 fixed region for main stream
Audio	
Audio Type	Mono sound
Environment Noise Filtering	Yes
Audio Sampling Rate	8 kHz/16 kHz
Audio Compression	G.711ulaw/G.711alaw/G.722.1/G.726/MP2L2/PCM/AAC-LC
Audio Bit Rate	64 Kbps (G.711 ulaw)/64 Kbps (G.711 alaw)/16 Kbps (G.722.1)/16 Kbps (G.726)/32 to 160 Kbps (MP2L2)/16 to 64 Kbps (AAC-LC)

Network	
Security	Password protection, complicated password, watermark, basic and digest authentication for HTTP, WSSE and digest authentication for Open Network Video Interface, security audit log, host authentication (MAC address)
Simultaneous Live View	Up to 6 channels
API	Open Network Video Interface (Profile S, Profile T), ISAPI, SDK
Protocols	TCP/IP, ICMP, DHCP, DNS, HTTP, RTP, RTSP, NTP, IGMP, IPv6, UDP, QoS, FTP, SMTP
User/Host	Up to 32 users 3 user levels: administrator, operator, and user
Client	iVMS-4200,Hik-Connect
Web Browser	Plug-in required live view: IE 10, IE 11, Local service: Chrome 57.0+, Firefox 52.0+

Image	
Wide Dynamic Range (WDR)	120 dB
SNR	≥ 52 dB
Day/Night Switch	Day,Night,Auto,Schedule
Image Enhancement	BLC,HLC,3D DNR
Image Settings	Rotate mode,saturation,brightness,contrast,sharpness,gain,white balance,adjustable by client software or web browser
Privacy Mask	4 programmable polygon privacy masks
Interface	
Ethernet Interface	1 RJ45 10 M/100 M self-adaptive Ethernet port
Built-in Microphone	Yes
Event	
Basic Event	Motion detection (support alarm triggering by specified target types (human and vehicle)),video tampering alarm,exception
Linkage	Upload to FTP, send email, notify surveillance center, trigger capture
General	
Power	12 VDC ± 25%, 0.4 A, max. 5 W,Ø5.5 mm coaxial power plug,reverse polarity protection, PoE: IEEE 802.3af, Class 3, max. 6.5 W
Material	Metal & Plastic
Dimension	170.8 mm × 66 mm × 69.1 mm (6.7" × 2.6" × 2.7")
Package Dimension	216 mm × 121 mm × 118 mm (8.5" × 4.8" × 4.6")
Weight	Approx. 270 g (0.6 lb.)
With Package Weight	Approx. 481 g (1.1 lb.)
Storage Conditions	-30 °C to 60 °C (-22 °F to 140 °F). Humidity 95% or less (non-condensing)
Startup and Operating Conditions	-30 °C to 60 °C (-22 °F to 140 °F). Humidity 95% or less (non-condensing)
Language	English, Ukrainian
General Function	Heartbeat,anti-banding,mirror,password protection,password reset via email

Aura.eg

Approval	
EMC	FCC: 47 CFR Part 15, Subpart B, CE-EMC: EN 55032: 2015, EN 61000-3-2:2019, EN 61000-3-3: 2013+A1:2019, EN 50130-4: 2011 +A1: 2014, RCM: AS/NZS CISPR 32: 2015, IC: ICES-003: Issue 7
Safety	UL: UL 62368-1, CB: IEC 62368-1: 2014+A11, CE-LVD: EN 62368-1: 2014/A11: 2017, BIS: IS 13252 (Part 1): 2010/IEC 60950-1: 2005
Environment	CE-RoHS: 2011/65/EU, WEEE: 2012/19/EU, Reach: Regulation (EC) No 1907/2006
Protection	IP67: IEC 60529-2013

▪ Typical Application

Hikvision products are classified into three levels according to their anti-corrosion performance. Refer to the following description to choose for your using environment.

This model has NO SPECIFIC PROTECTION.

Level	Description
Top-level protection	Hikvision products at this level are equipped for use in areas where professional anti-corrosion protection is a must. Typical application scenarios include coastlines, docks, chemical plants, and more.
Moderate protection	Hikvision products at this level are equipped for use in areas with moderate anti-corrosion demands. Typical application scenarios include coastal areas about 2 kilometers (1.24 miles) away from coastlines, as well as areas affected by acid rain.
No specific protection	Hikvision products at this level are equipped for use in areas where no specific anti-corrosion protection is needed.

▪ Dimension

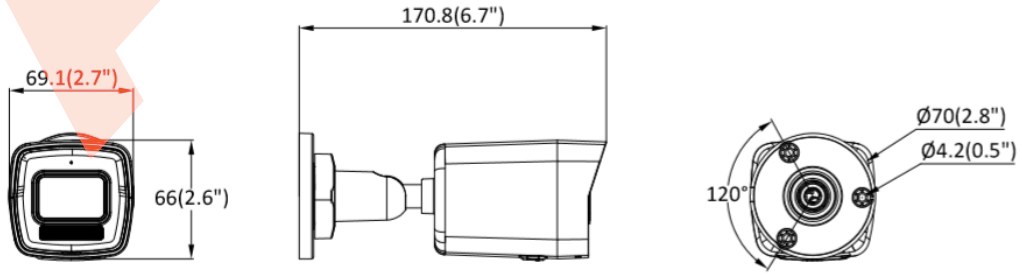

Unit: mm (inch)

▪ Accessory

▪ Optional

DS-1276ZJ-SUS	DS-1280ZJ-XS	DS-1275ZJ-SUS
		

▪ Installation Methods

Corner Mounting DS-1276ZJ-SUS+DS-1280ZJ-XS	Junction Box DS-1280ZJ-XS	Vertical Pole Mounting DS-1275ZJ-SUS+DS-1280ZJ-XS
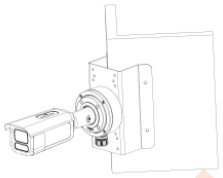	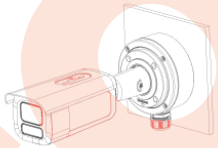	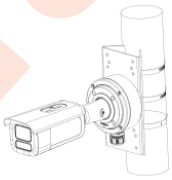

Aura.eg

Installation

1

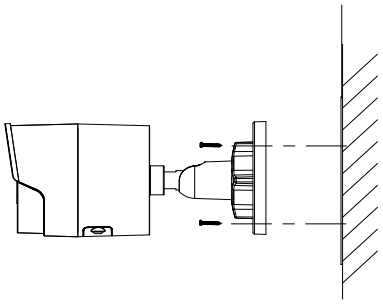

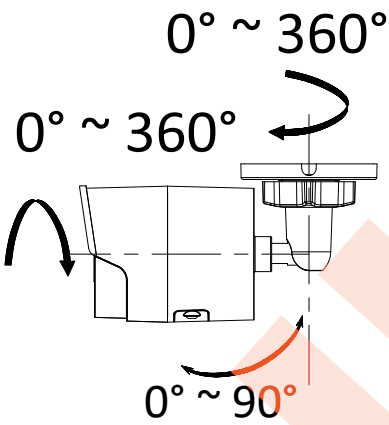

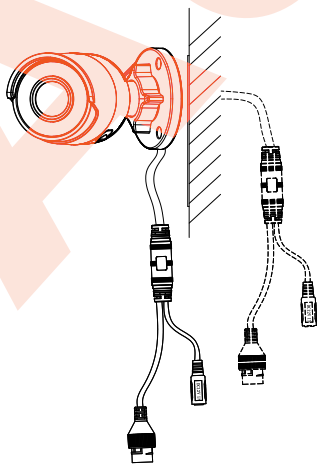

2

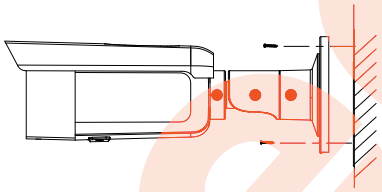

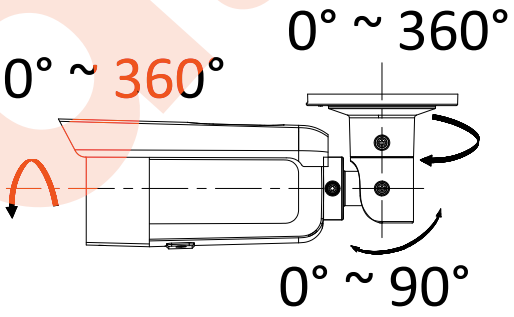

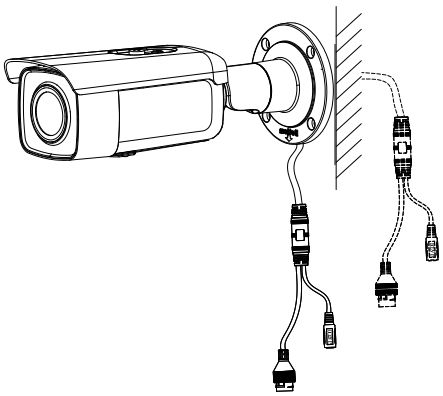

Aura.eg

3

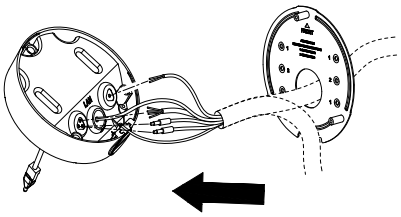

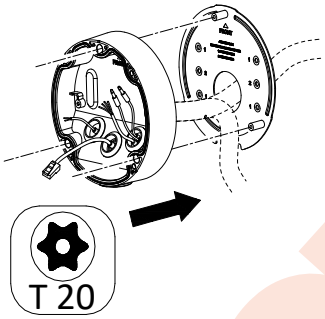

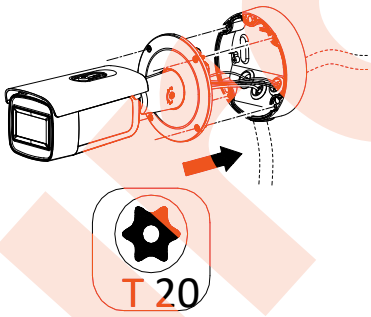

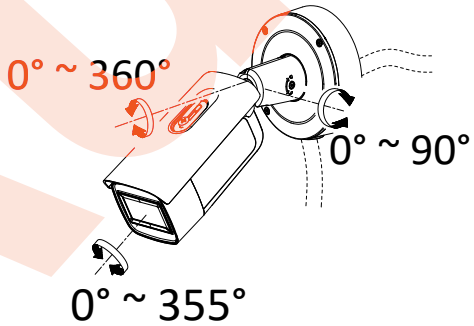

4

